Donatello

OVEN

Use and maintenance manual

Original instructions

DN 435
DN 635
DN 635 L
DN 935

HEat. smART.
Partner in Baking. Since 1963

CUPPONE

Introduction

We congratulate you for choosing a product designed and manufactured with cutting-edge technology.

The oven is checked and tested in the Manufacturer's plant before being delivered to the customer.
The "production process check sheet" enclosed with it guarantees that **each** step in the production process, from assembly to packaging, was carefully checked from both the operating and safety standpoints.

Before the installation, read the content of this manual **carefully**: it contains important information regarding product assembly and safety regulations.

The foundation

Our company was founded in 1963 by the Lorenzo, Luigi and Paolo Cuppone brothers. It immediately specialized in the production of ovens and equipment to prepare and cook pizza.
The constant research and experimentation of new equipment that are even now the strength of our company, have led us to design and patent the machinery and ovens that have revolutionized the way pizza is made.

Technical service

Your Dealer can solve any technical problem regarding use and maintenance.
Do not hesitate to contact him in case of doubt.

CUPPONE since 1963
CUPPONE S.R.L.
Via Sile, 36
31057 Silea (TV) - ITALY
T +39 0422 361143
F +39 0422 360993
info@cuppone.com - www.cuppone.com

Contents

1 Safety instructions

- Read this guide carefully before using and maintaining the appliance, and keep it with care in an accessible place for any future consultation by the various operators.
- Moreover, the manual must always accompany the product through its life, even in case of transfer.
- Before performing any maintenance, disconnect the electricity supply.
- Unauthorised actions, tampering or modifications that do not follow the information provided in this manual can cause damages, injuries or fatal accidents and null and void the warranty.
- Use or maintenance that fail to comply with the instructions in this manual may cause damage, injury or fatal accidents.
- The serial plate provides important technical information. This is vital in case of a request for maintenance or repair of the equipment: please do not remove, damage or modify it.
- Some parts of the equipment can reach high temperatures. We recommend you avoid pressing surfaces and do not get materials either flammable or sensitive to heat near the appliance.
- Do not rest objects on the oven, above all if built in material sensitive to heat.
- These appliances are intended to be used for commercial applications, for example in restaurant kitchens, canteens, hospitals and commercial companies such as bakeries, butcher shops, etc., but not for the continuous and mass production of food. A use other than the stated one is considered improper, potentially dangerous for people and animals and might permanently damage the appliance. The improper use of the equipment shall void the warranty.
- This appliance can be used by children aged from 8 years and above and persons with reduced physical, sensory or mental capabilities or lack of experience and knowledge if they have been given supervision or instruction concerning the use of the appliance in a safe way and understand the hazard involved. Children must not play with the appliance. Cleaning and user maintenance shall not be made by children without supervision.
- To clean the appliance, any of its components or accessories and the sub-structure DO NOT use:
  - abrasive, powder, aggressive or corrosive detergents (e.g. hydrochloric/muriatic or sulphuric acid, caustic soda, etc.)
  - abrasive or sharp tools (e.g. abrasive sponges, scrapers, steel brushes, etc.);
  - steamed or pressurised water jets.
- The staff using the appliance must be professionally prepared and periodically trained on its use, as well as the safety and accident prevention regulations.
- Children must be supervised to make sure they do not play with the appliance or parts of it.
- Always use tools resistant to heat (e.g. in steel). Cooking utensils in plastic or similar material might not withstand the oven high temperatures.
- Check regularly that fumes can be discharged safely. Do not obstruct the duct for any reason.
- FIRE RISK: leave the area around the appliance free and clean from fuels. Do not store flammable materials near this appliance.
- WARNING: RISK OF EXPLOSION! It is forbidden to use the oven in environments at risk of explosion.
- WARNING: always switch off the main switch when you finish using the appliance, above all during cleaning or in cases of prolonged downtime.
- If you notice any anomaly (e.g. damaged power cable, etc.), malfunction or fault, do not use the appliance and contact a Service Centre authorized by the Manufacturer. Demand original spare parts, or the Warranty will be null and void.
- Place the emergency phone numbers in a visible location.
- WARNING: it is forbidden to place flammable solids or liquids (spirits for instance) in the cooking chamber during the operation.
- Monitor the appliance during its entire operation, do not leave dishes in the oven unattended!
- Failure to follow these regulations may cause damage or even fatal injury, invalidate the guarantee and relieve the Manufacturer of all liability.
- We recommend you have the appliance checked by an Authorized Service Centre at least once a year.

- Noise levels lower than 70 dB.
- Do not disassemble, modify or disable machine parts (functional parts, control systems and safety devices).

Symbols used in the manual and on the labels applied to the machine

Indicates that caution is required when performing an operation described in a paragraph that bears this symbol. The symbol also indicates that maximum operator awareness is required in order to avoid unwanted or dangerous consequences.

Indicates that the surfaces marked with this symbol may be hot and must therefore be touched carefully.

Dangerous voltage

Risk of explosion

Reference to another chapter where the subject is dealt with in more detail.

Manufacturer's tip

Manufacturer's warning

Indicates that it is necessary to read carefully the paragraph marked with this symbol before installing, using and maintaining the equipment.

Knowing your oven

Fig.1.

Your oven can be used only to bake pizzas or similar dishes, such as bread or focaccia and to grill vegetables.
Its main parts are:

1 Chimney to vent any cooking fumes
2 Cooking chamber in stainless steel
3 Face in stainless steel
4 Chamber steam bleed valve.
5 Cooking surface in refractory bricks
6 Control display
7 Power cable inlet
8 Electrical compartment ventilation slots: keep them always clean and clear.

The temperature in the chamber is controlled by boards that switch the heating elements on and off to keep the set temperature constant.
The oven can manage separately the powers:

- of the bottom part of the oven chamber;
- of the top part of the oven chamber.

Preparing to use the oven

Clean the oven and any accessories accurately, both externally and internally, following the instructions in the dedicated chapter rigorously.

Maintenance and cleaning - *page* 20.

On first start-up, set the temperature to a value of **150 °C - 302 °F**, for the "**D**" model top percentage 80% bottom 20%, for the "**CD**" model set MAX at the top and MIN at the bottom for at least **8 hours, with no food inside**. During this time, keep the bleed valve open. If a hood is fitted, we recommend it is kept ON. In this first phase, because of the humidity evaporating from the insulating materials, the oven will give out unpleasant smells and fumes that will gradually disappear during the following operating cycles.
To switch the oven on and set its parameters, refer to:

Using CD MODELS - *page* 10
Using D MODELS - *page* 14

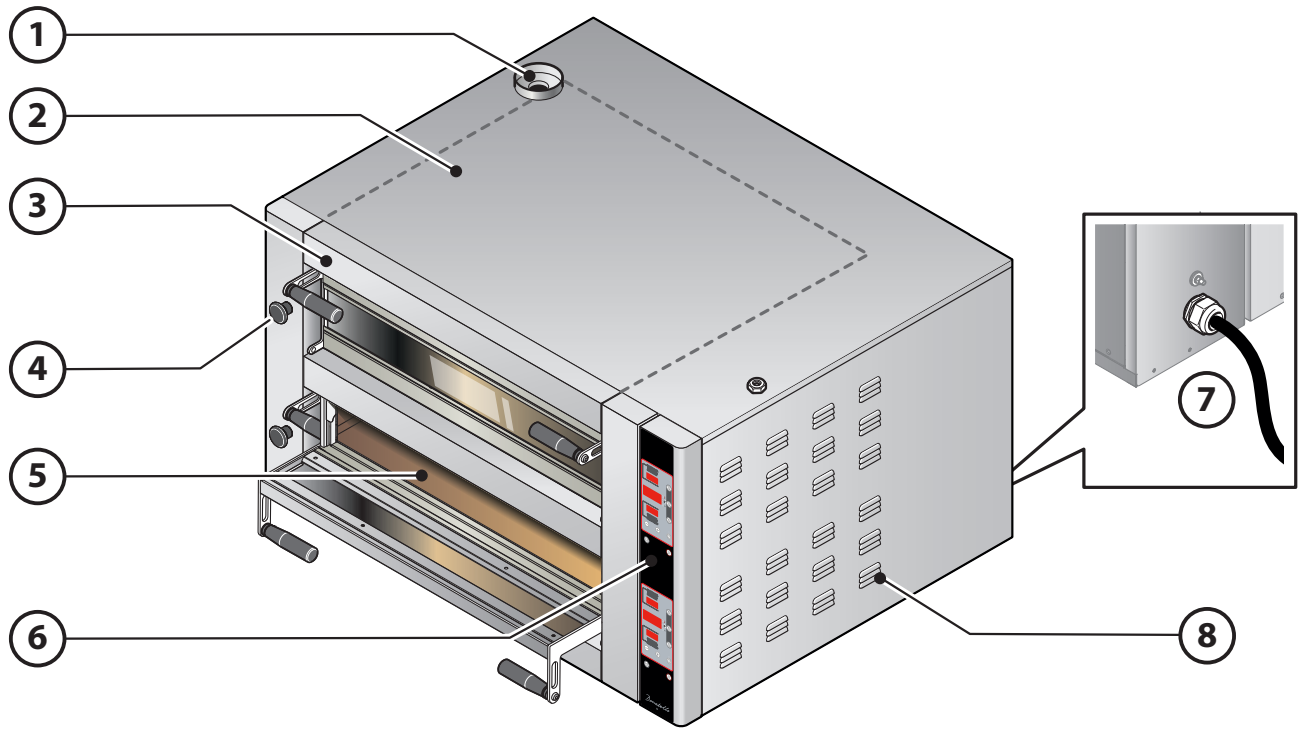

Fig.1.

The first day of use is considered as a running-in period: during this time the refractory bricks and insulating material keep releasing humidity until they dry out completely.

Some parts of the equipment can reach high temperatures. We advise you to avoid touching surfaces and not to get materials either flammable or sensitive to heat near the appliance.
Do not rest objects on the oven, above all if built in material sensitive to heat.
Take care and use personal protection equipment (i.e. gloves) when putting food into the cooking chamber or getting it out.

Some piece of advice...

- Before starting cooking, always preheat the oven: this is vital to get good food. Preheating the oven **must last at least an hour**, it is therefore always preferable to use the programmed switch-on function so that the oven is already hot when the place opens and ready to cook the desired food.

Programmed switch-on mod. CD: page 11
Programmed switch-on mod. D: page 15

- During work, keep the refractory surfaces clean using a stiff bristle brush.
- Passing from a type of pizza to another, wait for the oven to stabilize.
- Take your time when adjusting the cooking parameters according to the increase and/or decrease in the workload.
- An excess of flour in the cooking chamber can create smoke, smell and give the pizza an unpleasant taste.
- Clean the oven at the end of service.
- For the pizza either in a tray or on a paddle, alternate the MIN/MAX selection during the pre-cooking and cooking phases (especially on the top) to obtain an optimal result and rapid heat recovery in the chamber.
- For bread, it is recommended to spray water on the surface of the product and place a pan of water in the oven to obtain steam in the chamber.

WHAT IS PIZZAFORM?

Pizzaform is a Manufacturer's patent. It is a special press, produced in five models, to make pizza dough discs up to Ø52 cm - [Ø20.47 in.].
Its main features are:
- *high hourly output, up to 400 pizzas an hour, without using specialized labour;*
- *consistent shape and thickness of the disc of dough, without giving up the traditional edge, obtained thanks to the special shape of the chrome plates;*
- *possibility of changing the thickness of the dough discs easily.*

▶ Fig.2.

In the ovens, products cook thanks to the combined action of:
- **radiation**: the heat and infrared rays produced by the top elements make products crunchy and golden
  - ▶ this parameter is controlled by the percentage (mod. D) / setting (mod. CD) of the TOP.
- **convection**: the hot air that circulates in the chamber cooks the product evenly
  - ▶ his parameter is controlled by the temperature setting in the chamber
- **conduction**: the bottom elements heat the refractory surfaces on which the products lie
  - ▶ this parameter is controlled by the percentage (mod. D) / setting (mod. CD) of the BOTTOM.

UNSATISFACTORY COOKING RESULTS

If the cooking results are not as expected, try and check the following:
- **incorrect oven parameters**:
  - temperature in the chamber either too high or too low
  - percentages/settings of the BOTTOM or TOP either too high or too low
- **incorrect preheating**:
  - preheating is vital to get superb results right from the first pizza
  - in preheating, the percentage (mod. D) / setting (mod. CD) of the BOTTOM has been set too high: the refractory surfaces (without pizzas) have become too hot and burnt the first pizzas.
- **incorrect use of the steam bleed valve**:
  - on the back of the cooking chamber there are steam outlet slots that can be **opened/closed** using valve "**A**" according to the type of product to be cooked: for instance, if the smoke bleed valve remains closed, too much humidity could be generated in the chamber preventing the infrared rays of the upper elements from browning the surface of the products.

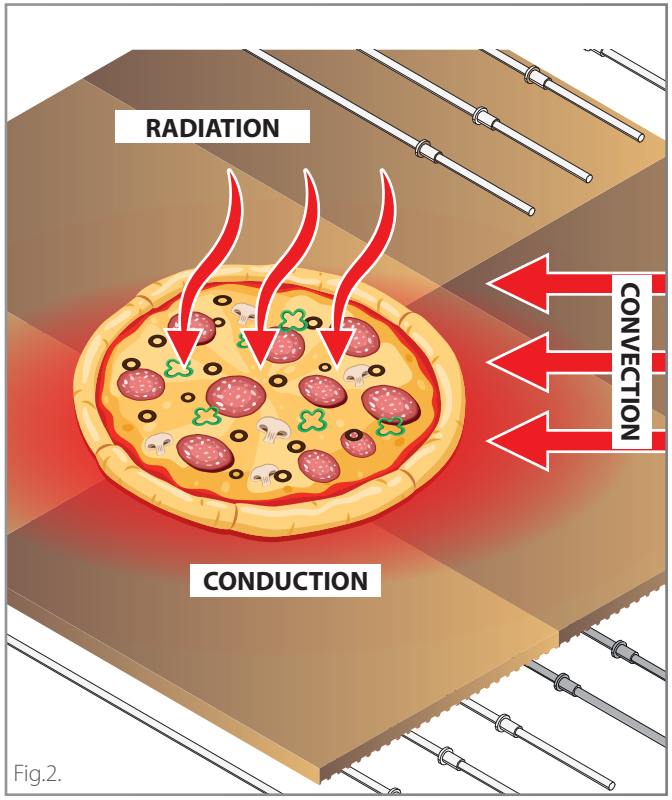

Fig.2.

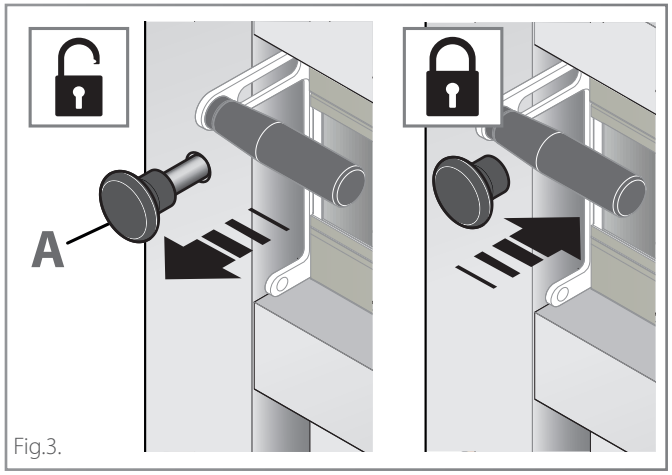

Fig.3.

COOKING TABLES

The parameters in the tables are just indicative, since they can vary according to the temperature of the room where the oven is installed and the type of dough to bake (e.g. type of flour, hydration, etc.).

D CONTROL PANEL		 Manual stretching				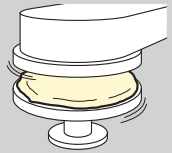 Stretching with Pizzaform				Preheating for both types (Manual stretching or stretching with Pizzaform)
TYPE		COOKING				COOKING				
		TIME	TEMP.	% TOP	% BOTTOM	TIME	TEMP.	% TOP	% BOTTOM	
CLASSIC		3 min	320-330 °C 608-626 °F	90%	5%	3 min	290 °C - 554 °F	85%	0%	**time**: 1 hour (can vary according to the set %) **temperature / %**: • Classic pizza: preheating at 320/330 °C, top 90% bottom 5%, increasing according to the amount of work, chimney closed during heating, open during work and stand-by; • Neapolitan pizza: preheating at 360/370 °C, top 90% bottom 5%, increasing according to the amount of work, chimney closed during heating, open during work and stand by. • Roman paddle pizza: preheating at 280 °C, top 70/80% bottom 20%, increasing according to the amount of work, chimney closed during preheating and the pre-cooking phase (if carried out), chimney open in the finishing phase and in standby; • Pizzas in trays: preheating to 280 °C, top 60% bottom 40%, increasing according to the amount of work. Chimney closed during pre-heating and in the pre-cooking phase (if carried out), chimney open in the finishing phase and in stand-by. • Bread: preheating to 230 °C, top 50% bottom 30%, descending during cooking (gravity cooking). 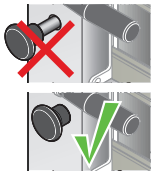
PAN		5 min	270 °C - 518 ° F	60%	30%	3 - 4 min	/	/	/	
NEAPOLITAN		90 sec	360-370 °C 680-698 °F	90%	5%	1 - 2 min	/	/	/	
DIRECT BAKING TIN		5-10 min	270 °C - 518 °F	50%	60%					
BAKING-TIN		5 min	280 °C - 536 °F	60%	40%	7 - 8 min	/	/	/	
PADDLE	PRECOOKING	5 min	280 °C - 536 °F	70%	20%	5 min	/	/	/	
	FINISHING	5 min	270 °C - 518 °F	60%	20%	3 min	/	/	/	

CD CONTROL PANEL		 Manual stretching				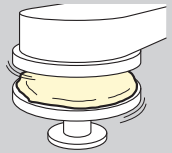 Stretching with Pizzaform				Preheating for both types (Manual stretching or stretching with Pizzaform)
TYPE		COOKING				COOKING				
		TIME	TEMP.	TOP	BOTTOM	TIME	TEMP.	TOP	BOTTOM	
CLASSIC		3 min	320-330 °C 608-626 °F	MAX	OFF	3 min	290 °C - 554 °F	85%	0%	**time**: 1 hour (can vary according to the set %) **temperature / selection**: • Classic pizza: preheating to 320-330 °C, MAX top OFF bottom, increasing according to the amount of work (e.g. switch immediately to MIN when starting to work continuously), chimney closed if possible in the heating phase, open afterwards. • Neapolitan pizza: preheating to 360/370 °C, MAX top, OFF bottom, increasing according to the amount of work (e.g. switch immediately to MIN when starting to work continuously), chimney closed if possible in the heating phase, open subsequently. • Roman paddle pizza: preheating to 280 °C, MAX top, MIN bottom, increasing according to the amount of work (e.g. switch immediately to MAX when starting to work continuously), chimney closed if possible in the heating phase, closed with pre-cooking, opened in the finishing stage. • Pizzas in trays: preheat to 280 °C, MAX top MIN bottom, reversing the factors 5/10 minutes before starting to put the trays in the oven; chimney closed if possible during preheating and in the pre-cooking phase (if carried out), chimney open in the finishing phase and in stand by; • Bread: preheating to 230 °C, MAX top, MIN bottom, immediately lowering to MIN as soon as the set temperature is reached, decreasing in the cooking phase (cooking with decreasing temperature). 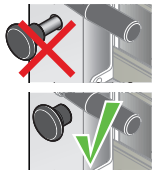
PAN		5 min	280 °C - 536 °F	MAX	MIN	3 - 4 min	/	/	/	
NEAPOLITAN		90 sec	360-370 °C 680-698 °F	MAX	OFF	1 - 2 min	/	/	/	
BAKING-TIN		7 - 8 min	280 °C - 536 °F	MAX	MIN	7 - 8 min	/	/	/	
PADDLE	PRECOOKING	5 min	280 °C - 536 °F	MAX	MIN	5 min	/	/	/	
	FINISHING	3 min	280 °C - 536 °F	MAX	MIN	3 min	/	/	/	

Contents of CD models

Knowing the control panel ▶ Fig.4.

1 **Main display**
Displays alternatively:
- the current temperature in the chamber
- the set temperature
- the intervention time of the end-of-cooking sound warning
- the countdown time (time to the oven switching on if programmed switch-on is used)

2 **+ and - keys**
Allow increasing or decreasing:
- the temperature values in the chamber,
- the intervention time of the end-of-cooking sound warning
- the countdown time (time to the oven switching on if programmed switch-on is used)

3 **Element LED**: with the oven running, if on, this indicates that the elements are heating; with the oven off, if flashing, it indicates a countdown (timed switch-on)

4 **Top power check**
Allows checking the power of the elements in the top, offering three adjustments:
- OFF
- MIN = 33%
- MAX = 100%

4A **Top LEDs:** highlight the selection made

5 **Bottom power check**
Allows controlling the power of the elements in the bottom, offering three adjustments:
- OFF,
- MIN = 33%
- MAX = 100%

5A **Bottom LEDs:** highlight the selection made

6 **ON/OFF switch**
Switches the display on and off

7 **Light key**
Switches the light in the cooking chamber on and off

8 **Clock key**
With the oven on: activates an end-of-cooking acoustic signal
With the oven off: sets the programmed switch-on

CD MODEL

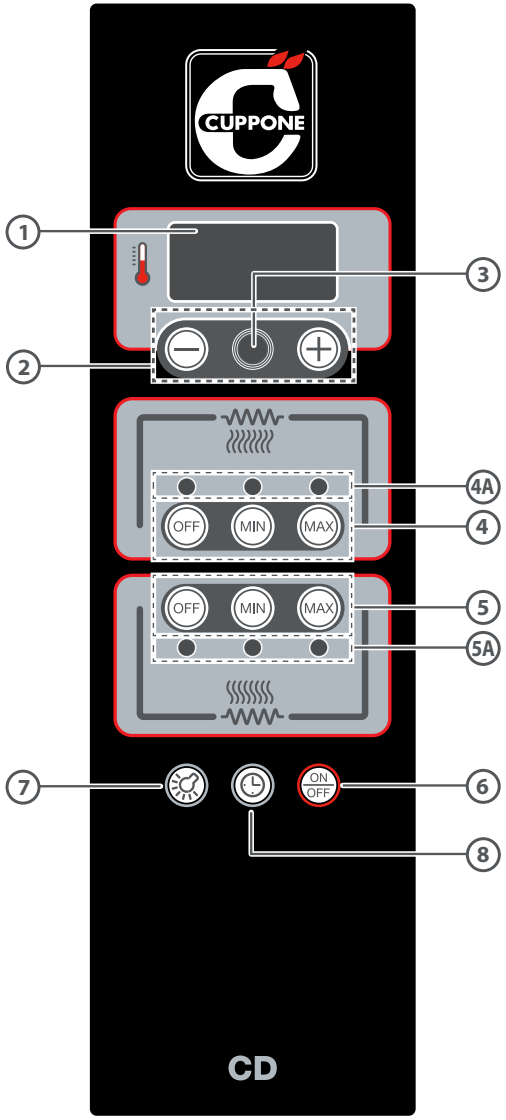

The control panel must be used only with dry and clean fingers.

Continuous and prolonged pressing of the (2) + or - keys increases or decreases the value quicker.

Fig.4.

Use guided procedure

The oven can be switched on:

- **manually**: switching the oven on when it must be used ▶ it is necessary to wait at least an hour for the oven to preheat and get the right temperature.

  See ▶ chap. "Manual switch-on" on page 11 and ▶ Fig.5.

- **programming it**: setting the number of hours missing to the next switch-on ▶ the oven will switch on automatically.

  See ▶ chap. "Programmed switch-on" on page 11 and ▶ Fig.6.

- **automatically**using a clock or SMS (with external modules not supplied by the Manufacturer).

A TURNING THE OVEN ON

MANUAL SWITCH-ON

▶ Fig.5.

Pressing the ON/OFF key, the display lights up and shows the current temperature of the cooking chamber (i.e. 25 °C - 77 °F).

PROGRAMMED SWITCH-ON

The programmed switch-on function is very useful because the oven can be already hot, and therefore ready to bake, when the restaurant is opened.

▶ Fig.6.

(1) **With the oven off**, press the CLOCK key;

(2) the display will show **the time to switch-on**: if you wish to modify this time, use the "**+**" or "**-**" key until the display shows the desired time (maximum limit 99.5 that is 99 hours and 50 minutes).

Once set, the countdown starts, at the end of which the oven will switch on automatically with the temperature and power parameters used **for the last cooking**.

If you wish to change them:

- exit programmed switch-on pressing the "CLOCK" key;

Fig.5.

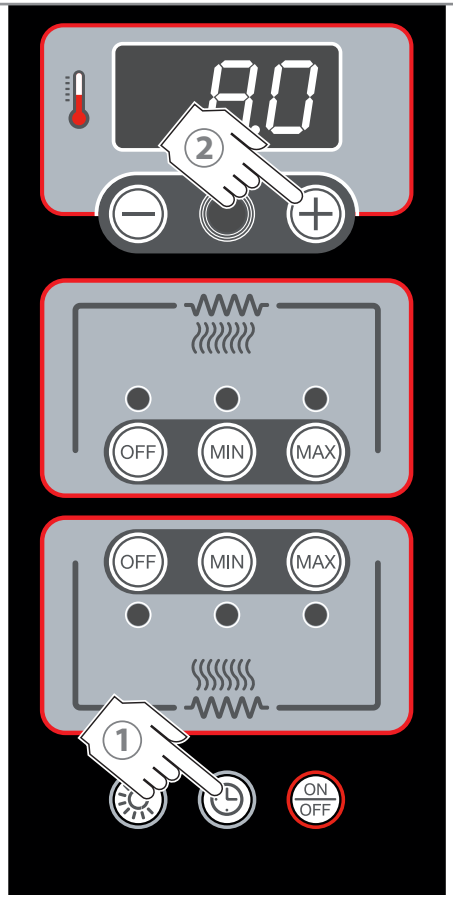

Fig.6.

- switch the oven on with the ON/OFF key,
- set a cooking cycle with the desired parameters: (▶ Fig.7. - Fig.8.)
- switch the oven off with the ON/OFF key,
- set the programmed switch-on as explained above.

To exit the function and cancel programmed switch-on, press the CLOCK key again.

B SETTING THE PREHEATING

Preheating must have the same cooking parameters as the recipe to be used (see table on page 8, pre-heating information). It must be carried out without products in the cooking chamber and takes about an hour for the oven to be ready for cooking.

▶ Fig.7.

Set the **preheating temperature** using the "+" or "-" keys, until the desired value is displayed.

▶ Fig.8.

Set the **top** and **bottom power** acting on the keys shown in the figure.

After setting these three parameters, the oven starts heating straight away.

The ELEMENTS led will switch off after about one hour: this means the oven has reached the temperature set for preheating and is ready for cooking.

Fig.7.

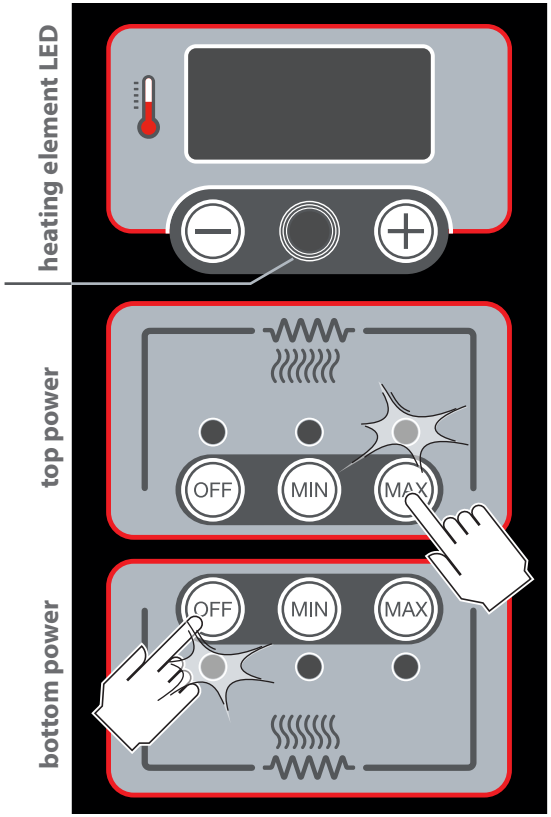

Fig.8.

C ACTIVATING AN END-OF-COOKING SIGNAL (BUZZER)

▶ Fig.9.

If you wish, you can enable a buzzer that will go off when the set time expires.
To activate it:

1. **with the oven on**, press the CLOCK key;
2. the display will show **after how long the buzzer will sound** (in the example 3.3 that is three minutes and thirty seconds): if you wish to change this time, use the "+" or "-" keys until the display shows the desired time (e.g. 5.2 that is five minutes and twenty seconds).

After setting it, the countdown starts, at the end of which a buzzer will sound to highlight the end of cooking.
To stop the buzzer, press the CLOCK key.

Warning: the oven continues heating when the buzzer goes off!

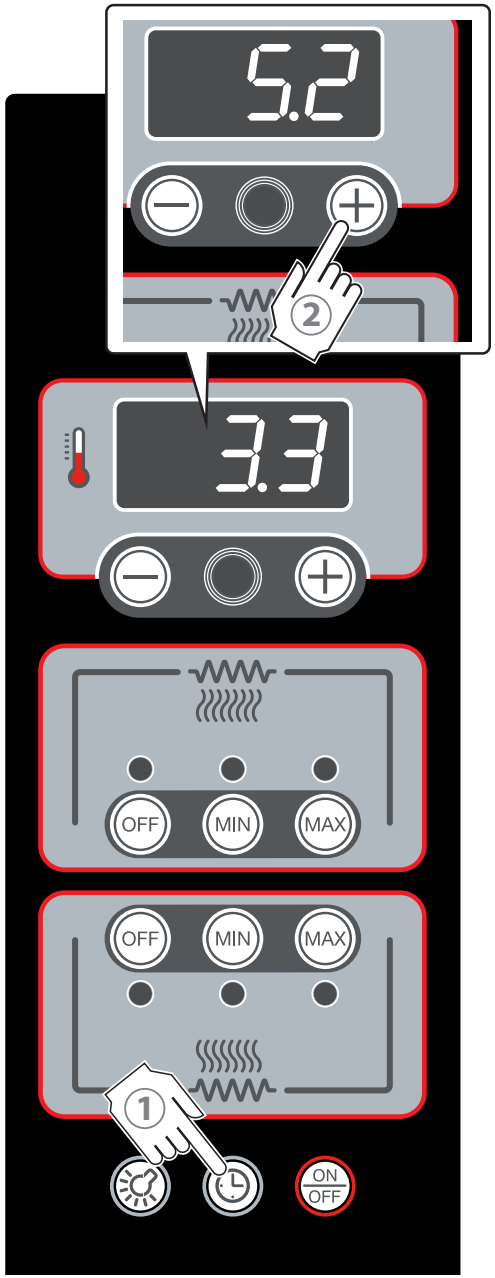

Fig.9.

D STARTING COOKING

▶ **Fig.10.**

Once preheating is complete, you can start cooking and bake the products using personal protection equipment (e.g. gloves) and tools suitable for contact with food and made of material resistant to high temperatures (e.g. steel).

For optimal results, always adhere to the oven capacity declared by the Manufacturer and position the products to be cooked evenly in the cooking chamber.

During cooking, it is always possible to change any value by acting as usual.

During cooking, the heating element LED may switch back on; this means the elements have come back on to keep the set temperature constant.

E SWITCHING THE LIGHT ON (OPTIONAL)

▶ **Fig.11.**

With the oven both off and on, the light can be switched on acting on the LIGHT key, as required.
Press the same key to switch it off.

F OPENING AND CLOSING THE CHAMBER STEAM BLEED VALVE

On the front left of the oven there is a valve that opens and closes the steam bleed valve: this is used to maintain in the cooking chamber the humidity level most suitable for the type of product to be cooked.

▶ **Fig.12.**

To open the valve and get the steam out of the chamber, pull the valve outwards "**1**". To close it again, simply push the valve to the initial position "**2**".

G SWITCHING THE OVEN OFF

▶ **Fig.13.**

To switch the oven off, keep the ON/OFF key pressed for about 2 seconds.

Fig.10.

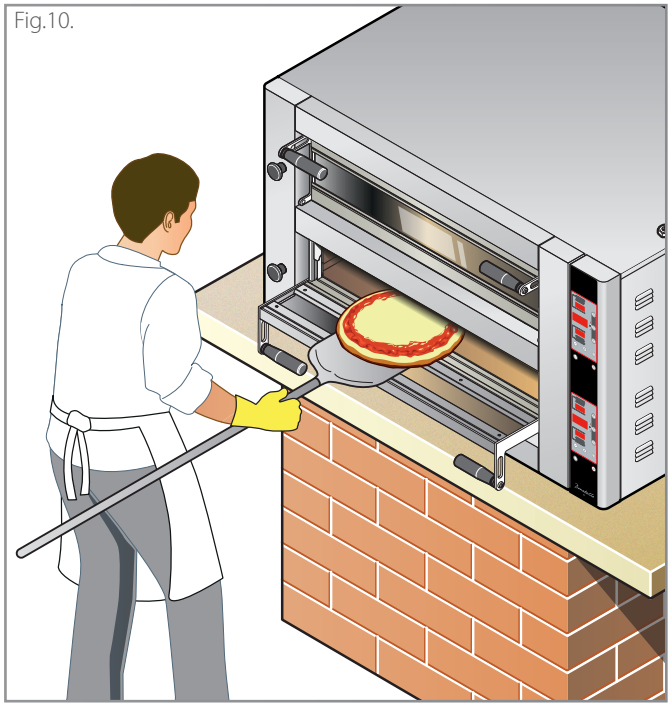

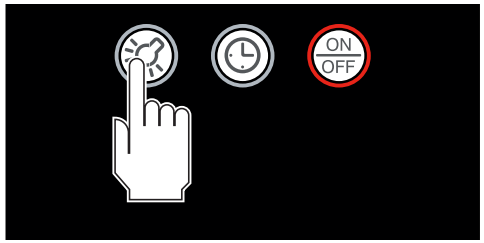

Fig.11.

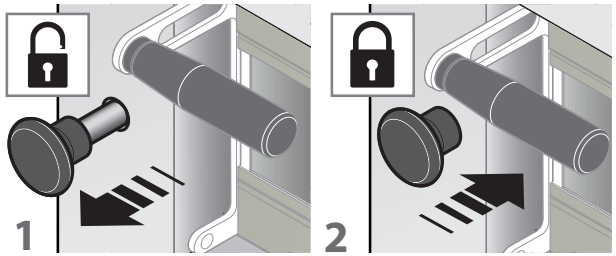

Fig.12.

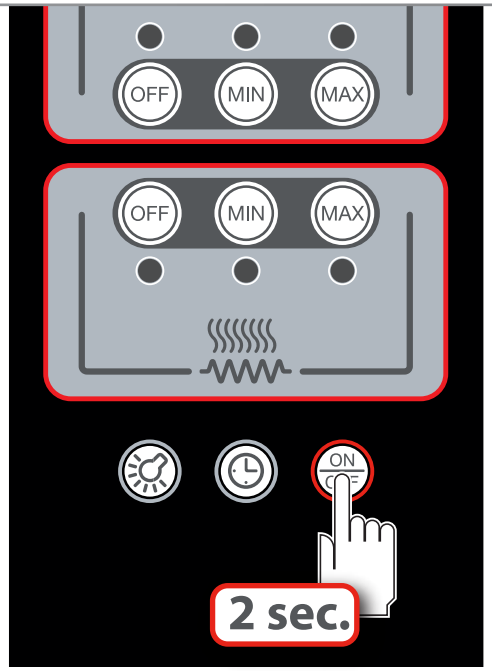

Fig.13.

Contents of D models

Knowing the control panel ▶ Fig.14.

1 **Setting the top**
Allows entering and exiting the top elements percentage setting.

2 **Setting the chamber**
Pressing it once allows entering the chamber temperature setting; pressing it a second time, if done within two seconds of the first, allows entering program selection.

3 **Setting the bottom**
Allows entering and exiting the bottom elements percentage setting.

4 **Up key**
Allows increasing the chamber temperature values, top elements percentage, bottom elements percentage, countdown time and program number.

5 **Down key**
Allows decreasing the chamber temperature values, top elements percentage, bottom elements percentage, countdown time and program number.

6 **Clock key**
Allows activating the "buzzer" and "countdown" function.

7 **Light key**
Switches the light in the cooking chamber on and off

8 **On/Off key**
Activates and deactivates the oven.

10 **Led 1**
If ON, it shows that the user is setting the chamber temperature.

11 **Led 2**
If ON, it shows that the user is selecting a program.

12 **Led 3**
If ON, it shows the elements are heating

13 **Led 4**
If flashing, it shows the countdown has been activated.

14 **Display 1**
Displays the value of top elements operation percentage.

15 **Display 2** shows:
- temperature in the chamber,
- set temperature,
- number of selected program,
- intervention time of the end-of-cooking warning (buzzer),
- countdown time.

16 **Display 3**
Displays the value of bottom elements operation percentage.

D MODEL

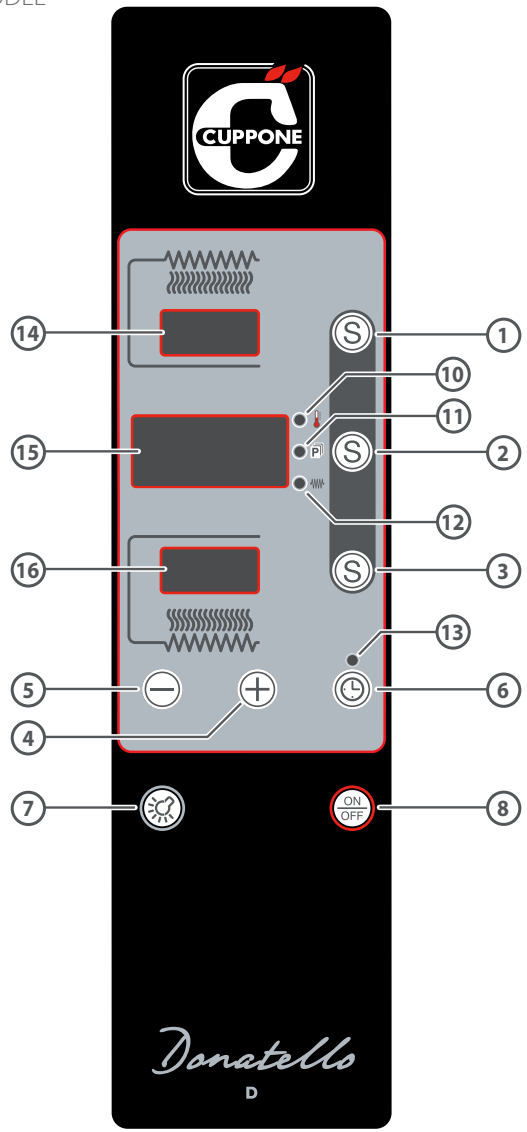

The control panel must be used only with dry and clean fingers.
Continuous and prolonged pressing of the "+" and "-" keys increases or decreases the value quicker.

Fig.14.

Use guided procedure

The oven can be switched on:

- **manually**: switching the oven on when it must be used ▶ it is necessary to wait at least an hour for the oven to preheat and get the right temperature.

  See ▶ chap. "MANUAL SWITCH-ON" on page 15 and Fig.15.

- **programming it**: setting the number of hours missing to the next switch-on ▶ the oven will switch on automatically.

  See ▶ chap. "Programmed switch-on" on page 15 and Fig.16.

- **automatically**using a clock or SMS (with external modules not supplied by the Manufacturer).

The start of a preheating or cooking cycle can be carried out:

- **manually** ▶ the user manually sets the parameters of the chamber temperature, top power, bottom power. The values entered are not stored and must be reset each time the power is turned on.

  See ▶ chap. "Setting parameters in manual mode" on page 16 and ▶ Fig.17.

- **using previously stored programs** ▶ the user must choose the recipe that best suits the product to be cooked. If, during the pre-heating or cooking cycles, you change the parameters of the selected recipe (e.g. the temperature is increased), the changes will affect **only the cooking in progress** and will not change the original recipe (temporary effect).

  See ▶ chap. "Use of a previously stored programme" on page 17 and ▶ Fig.18.

A TURNING THE OVEN ON

MANUAL SWITCH-ON

▶ Fig.15.

Press the ON/OFF key: the oven turns on displaying the parameters of the last programme used before switch-off.

- the **display** (A) shows the percentage of the top elements (top power) set for the program in use;
- the **display** (B) shows the current temperature in the cooking chamber (e.g. 25 °C - 77 °F); to display the temperature set by the programme (e.g. 320 °C - 608 °F) press the (S) (B1) key once (the temperature led will turn on); to know the name of the programme you are using, press quickly the same key once more (S) (B2) (the programme led will turn on);
- the **display** (C) shows the percentage of the bottom elements (bottom power) set for the program in use.

PROGRAMMED SWITCH-ON

The programmed switch-on function is very useful because the oven can be already hot, and therefore ready to cook, when the restaurant is opened. The oven is fitted with a "countdown" function for automatic switch-on.

▶ Fig.16.

(1) **With the oven off**, press the CLOCK key;

(2) while the display is flashing (B), using the "**+**" or "**-**" keys, set the desired time (maximum limit 99.5 that is 99 hours and 50 minutes, in the example 02.2 = 2 hours and 20 min.).

(3) When the display stops flashing, (B) the set value will be stored, the other two displays will switch off and the countdown will start; the LED flashing (O) shows that the function is active.

At the end of the programmed time, the oven switches on and displays the parameters of the last program used before switch-off.

If you wish to stop the "programmed switch-on" function, press the CLOCK key or the ON/OFF key.

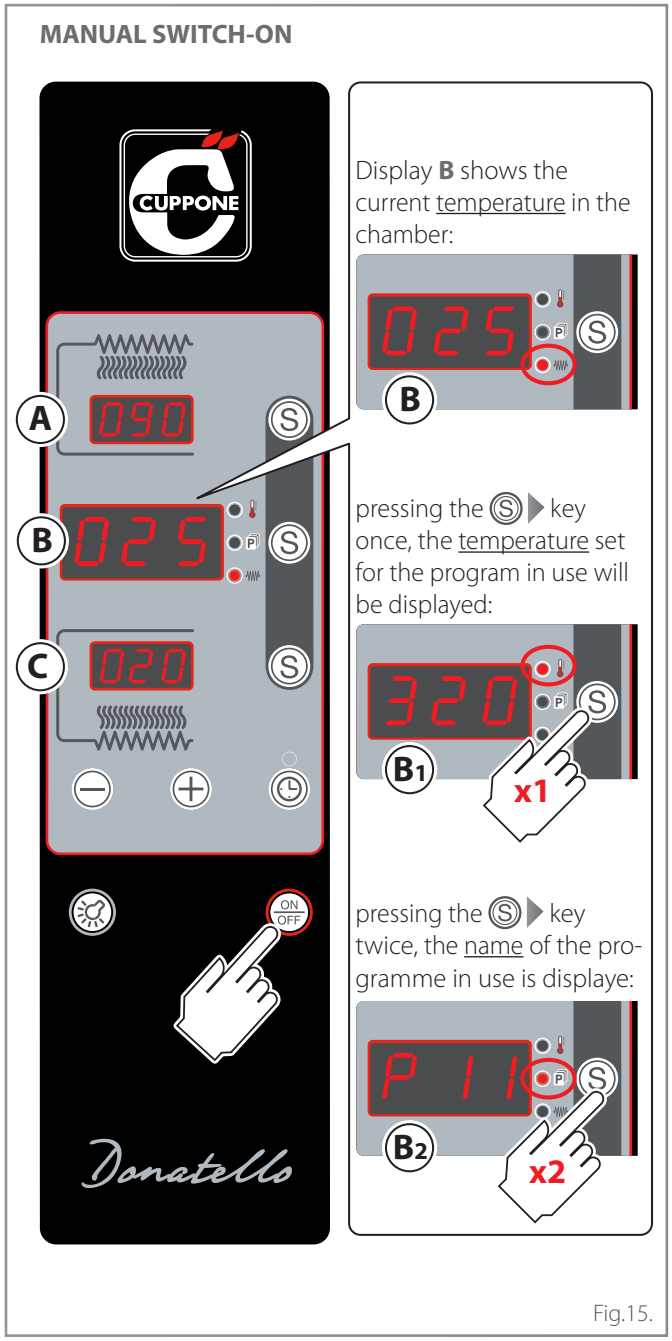

Fig.15.

PROGRAMMED SWITCH-ON

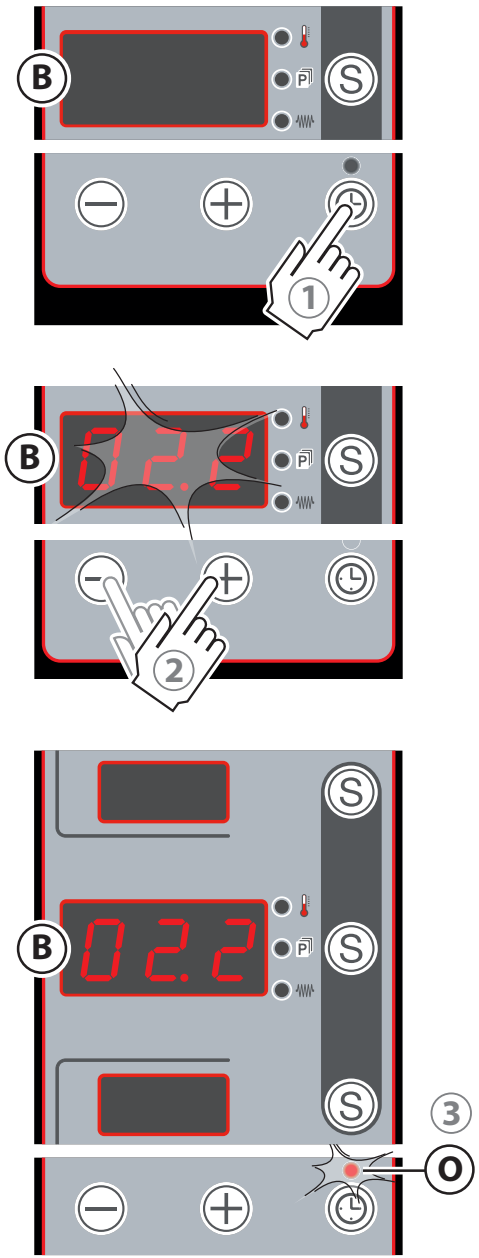

Fig.16.

B SETTING THE PREHEATING

Preheating must have the same cooking parameters as the recipe to be used (see table on page 8, preheating information). It must be carried out without products in the cooking chamber and takes about an hour for the oven to be ready for cooking. As already explained, preheating and cooking can be set manually or using previously stored programs:

▶ chap. "Setting parameters in manual mode" on page 16
▶ chap. "Use of a previously stored programme" on page 17

SETTING PARAMETERS IN MANUAL MODE

▶ Fig.17.

The user can set the parameters of the chamber temperature, top power, bottom power manually.
The values entered are not stored and must be reset each time the power is turned on.
Proceed as follows:

- **SETTING THE TOP POWER**
  1. enter the mode pressing the Ⓢ (A) key;
  2. it will be possible to change the displayed value using the "+" and "-" keys while the display is flashing.

  The value will be programmed when it stops flashing.

- **SETTING THE CHAMBER TEMPERATURE**
  1. enter the mode pressing the Ⓢ (B) key: the temperature LED switches on;
  2. it will be possible to change the displayed value using the "+" and "-" keys while the display is flashing.

  The value will be programmed when it stops flashing.

- **SETTING THE BOTTOM POWER**
  1. enter the mode pressing the Ⓢ (C) key;
  2. it will be possible to change the displayed value using the "+" and "-" keys while the display is flashing.

  The value will be programmed when it stops flashing.

SETTING THE PARAMETERS MANUALLY

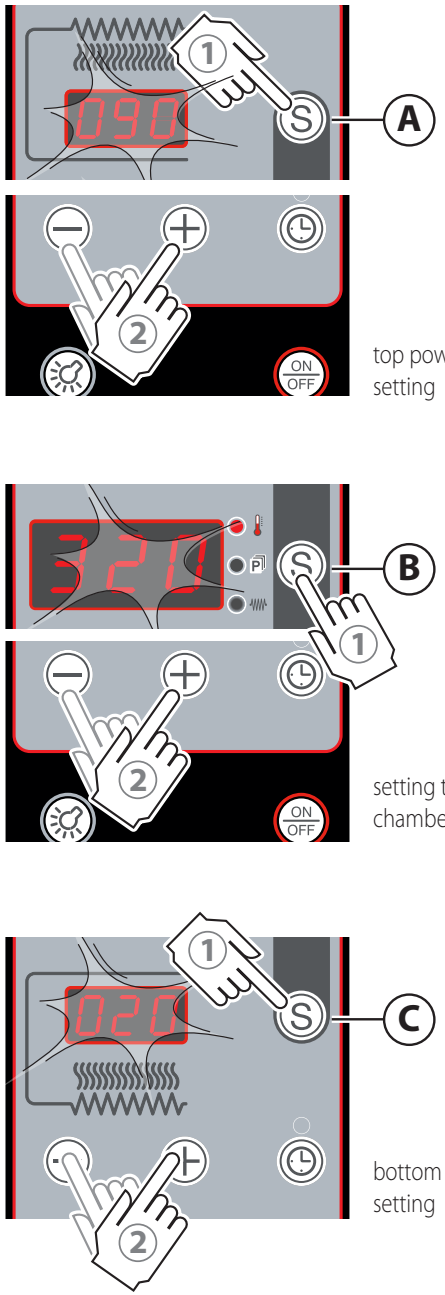

Fig.17.

USE OF A PREVIOUSLY STORED PROGRAMME

▶ Fig.18.

1. Quickly press the Ⓢ key twice: the P programme led turns on, the display Ⓑ shows the programme in use (e.g. P11) while the displays Ⓐ and Ⓒ show the percentages of the elements set in the programme.
2. If you wish to know also the temperature set for the displayed program, press key Ⓢ (the temperature LED will switch on). To display the name of the program again, press key Ⓢ.
3. To select a different program, when the display Ⓑ shows the name of the program being used (e.g. P11), press the keys "**+**" and "**-**" to scroll the list of the 99 available programs.

C STARTING PRE-HEATING OR COOKING

After manually setting the parameters or viewing the desired program on the display, the oven immediately starts heating without having to do anything else.

▶ Fig.19.

If the **HEATING ELEMENTS** LED is on, the heating elements are active to bring the oven up to temperature.
If the **HEATING ELEMENTS** LED is off, the oven has reached the set temperature and is ready for cooking.

If, during cooking, it is necessary to modify the parameters of the displayed program Ⓑ, act as explained in ▶ Fig.17.
The changes made will affect **only the program in progress** and not the original recipe (temporary effect). To modify the original recipe permanently, see page 17;

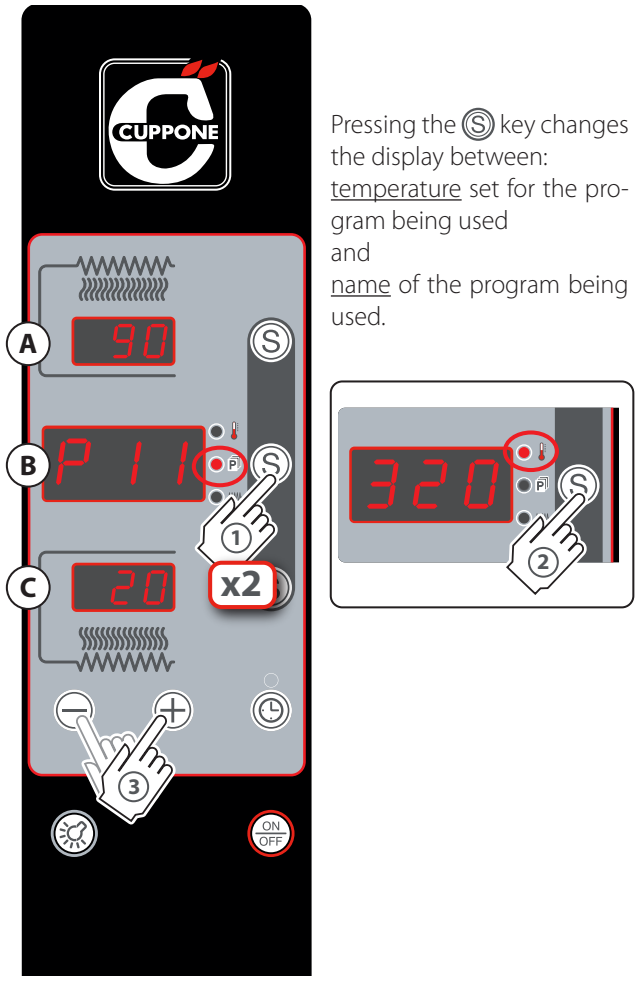

Pressing the Ⓢ key changes the display between:
temperature set for the program being used
and
name of the program being used.

Fig.18.

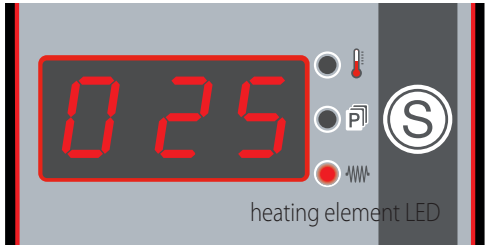

Fig.19.

Creating - modifying cooking programs permanently

▶ Fig.20.

To set and modify the parameters of the stored programs "**permanently**":

1. **With the oven switched off**, keep key Ⓢ pressed for 4 seconds (all displays light up).
2. Press the key again Ⓢ; the display Ⓑ shows the program being worked on and the program LED P lights up.
3. Using the keys "**+**" and "**-**", scroll the programs until you find the one you wish to change

▶ Fig.21.

When the display Ⓑ shows the program you wish to change, you can vary its parameters acting as explained below. Careful, go from one setting to the other while the displays are flashing. If you wait too long, the displays switch off and you exit programming (the changes made are saved anyway).

- **SETTING THE TOP POWER**
  1. enter the mode pressing the Ⓢ Ⓐ key;
  2. it will be possible to change the displayed value using the "**+**" and "**-**" keys while the display is flashing.
- **SETTING THE CHAMBER TEMPERATURE**
  1. enter the mode pressing the Ⓢ Ⓑ key: the temperature LED switches on;
  2. it will be possible to change the displayed value using the "**+**" and "**-**" keys while the display is flashing.
- **SETTING THE BOTTOM POWER**
  1. enter the mode pressing the Ⓢ Ⓒ key;
  2. it will be possible to change the displayed value using the "**+**" and "**-**" keys while the display is flashing.

To exit the settings and save your changes, wait for the displays to go off or keep the key Ⓢ next to the display Ⓑ pressed until all displays go off.

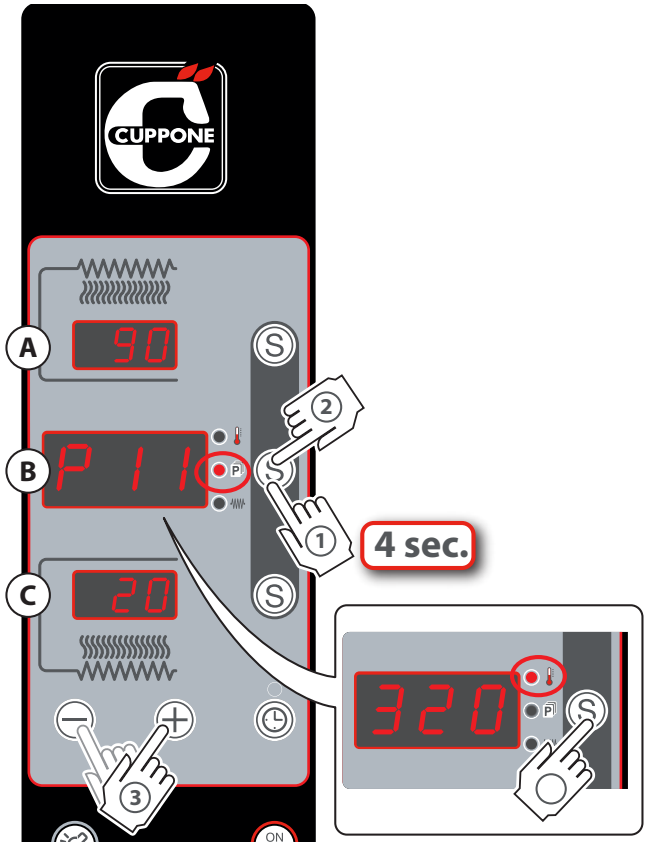

Pressing the Ⓢ key changes the display between:
temperature set for the program you wish to change
and
name of the program you wish to change.

Fig.20.

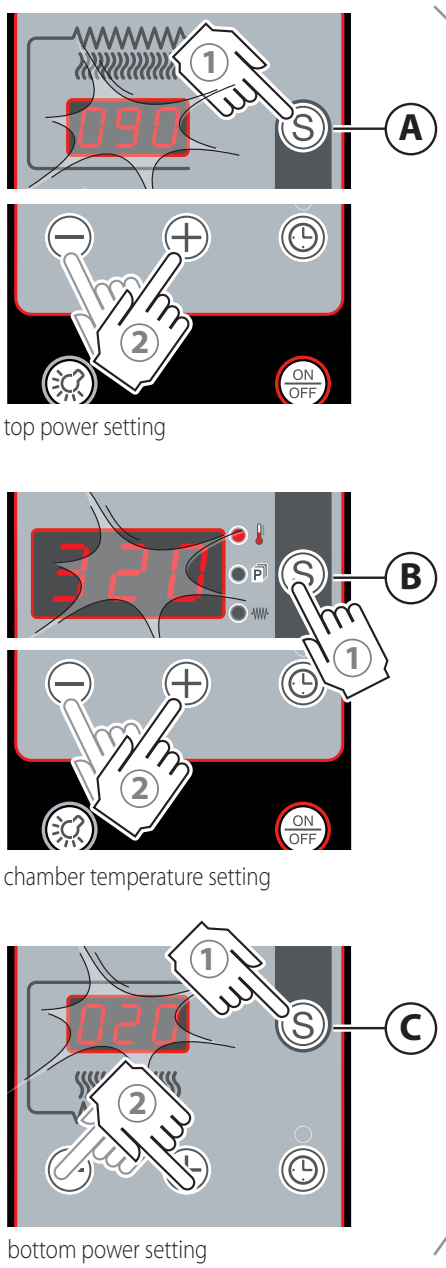

Go from one setting to the other while the displays are flashing. If you wait too long, the displays switch off and you exit programming. (the changes made will be saved anyway)

Fig.21.

D ACTIVATING AN END-OF-COOKING SIGNAL (BUZZER)

If you wish, you can enable a buzzer that will go off when the set time expires.

▶ Fig.22.

1. **With the oven on** press the CLOCK key;
2. Set the desired time using the "**+**" or "**-**" keys. The display Ⓑ shows after how much time the buzzer will go off (e.g. 01.1 that is 1 minute and ten seconds).

After setting it, the countdown starts, at the end of which a buzzer will sound to highlight the end of cooking.
To stop the buzzer, press the CLOCK key.

Warning: the oven continues heating when the buzzer goes off!

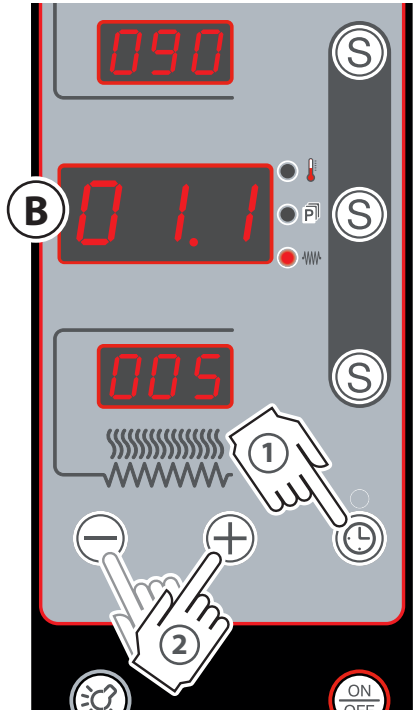

Fig.22.

E STARTING COOKING

▶ Fig.23.

Once preheating is complete, you can start cooking and bake the products using personal protection equipment (e.g. gloves) and tools suitable for contact with food and made of material resistant to high temperatures (e.g. steel).

For optimal results, always adhere to the oven capacity declared by the Manufacturer and position the products to be cooked evenly in the cooking chamber.

During cooking, it is always possible to change any value by acting as usual. If a pre-set program is being used the changes made will affect **only the cooking in progress** and not the original recipe (temporary effect).
To modify the original recipe permanently, see page 17.

During cooking, the heating element LED may switch back on; this means the elements have come back on to keep the set temperature constant.

F SWITCHING THE LIGHT ON (OPTIONAL)

▶ Fig.24.

With the oven both off and on, the light can be switched on acting on the LIGHT key, as required. Press the same key to switch it off.

G OPENING/CLOSING THE CHAMBER STEAM BLEED VALVE

On the front left of the oven there is a valve that opens and closes the steam bleed valve: this is used to maintain in the cooking chamber the humidity level most suitable for the type of product to be cooked.

▶ Fig.25.

To open the valve and get the steam out of the chamber, pull the valve outwards "**1**". To close it again, simply push the valve to the initial position "**2**".

Fig.23.

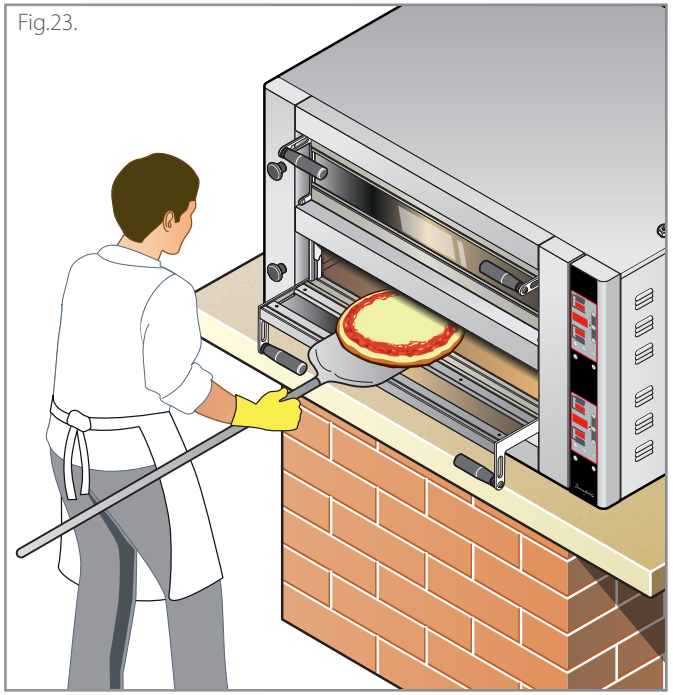

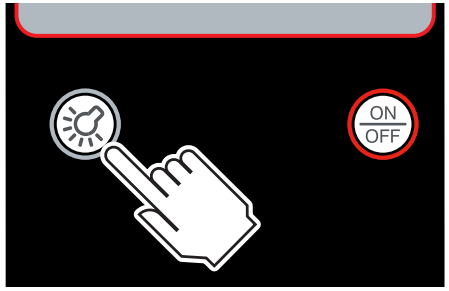

Fig.24.

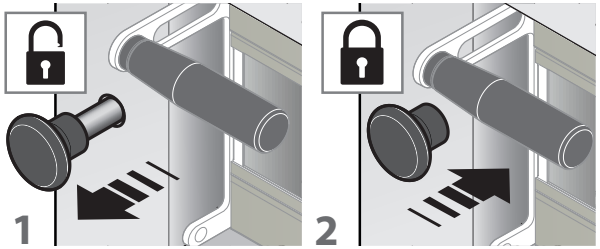

Fig.25.

H SWITCHING THE OVEN OFF

▶ Fig.26.

Pressing the ON/OFF key, the oven turns off.
When it is switched on again, the oven will repeat the last program used before switching off, without the changes made manually during cooking (temporary changes).

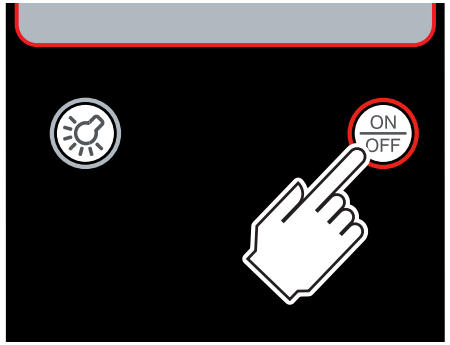

Fig.26.

Warnings

Before any cleaning, it is necessary to **switch off the power** to the appliance (acting on the system switch) and wear suitable personal protection equipment (e.g. gloves, etc.). The user must carry out only routine maintenance, for extraordinary maintenance, contact a Service Centre requesting service from an authorised technician. The Manufacturer warranty does not cover damages due to negligent or incorrect maintenance or cleaning (e.g. use of unsuitable detergents).

Any cleaning must be carried out with the oven completely cold and wearing adequate personal protection devices (e.g. gloves, etc.).

When cleaning any part or accessory do NOT use:

- abrasive or powder detergents;
- aggressive or corrosive detergents (e.g. hydrochloric or sulphuric acid, caustic soda, etc,). Caution! Never use these substances also when cleaning the substructure/floor under the appliance or its base;
- abrasive or sharp tools (e.g. abrasive sponges, scrapers, steel brushes, etc.);
- steamed or pressurised water jets.

It is best to have a Service Centre perform maintenance and inspection on the appliance at least once a year to ensure top working and safety conditions.

Keep the vents of the electrical compartment clean and clear.

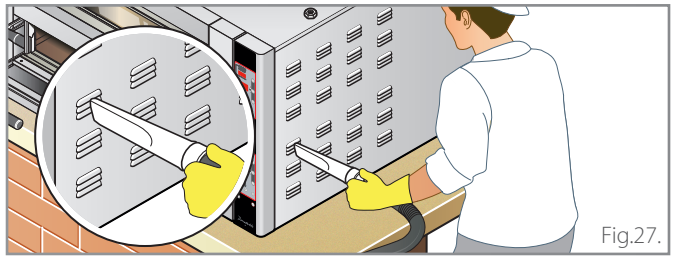

Fig.27.

Oven cleaning

CLEANING THE EXTERNAL STEEL PARTS

Use a cloth dampened with hot soapy water and end with rinsing and drying.

CLEANING THE GLASS

Clean any glass with a soft cloth and special glass detergent.

CLEANING THE DISPLAY

Clean the display with a soft cloth and a little detergent for delicate surfaces. Avoid using considerable quantities of product since any infiltration may damage the display.
Avoid also using very aggressive detergents that may damage the material the display is made of (polycarbonate).

CLEANING THE REFRACTORY SURFACE

On the refractory surface, there are normally some food residues (e.g. fat, food residues, etc.) that must be removed frequently for health and safety reasons.

Remove the coarser food residues with a natural fibre brush; then, if necessary, remove the refractory bricks of the cooking surface as shown in the figure and suck the carbonized residues accumulated under them on the bottom of the oven with an ash extraction bin.
Never use liquids to clean the refractory surface.

While reinserting the bricks, be careful not to pinch your fingers.

Replacement refractory bricks can be obtained from the Manufacturer.

If manual cleaning is not enough, use the **PYROLYSIS** ▶ function, see page 21

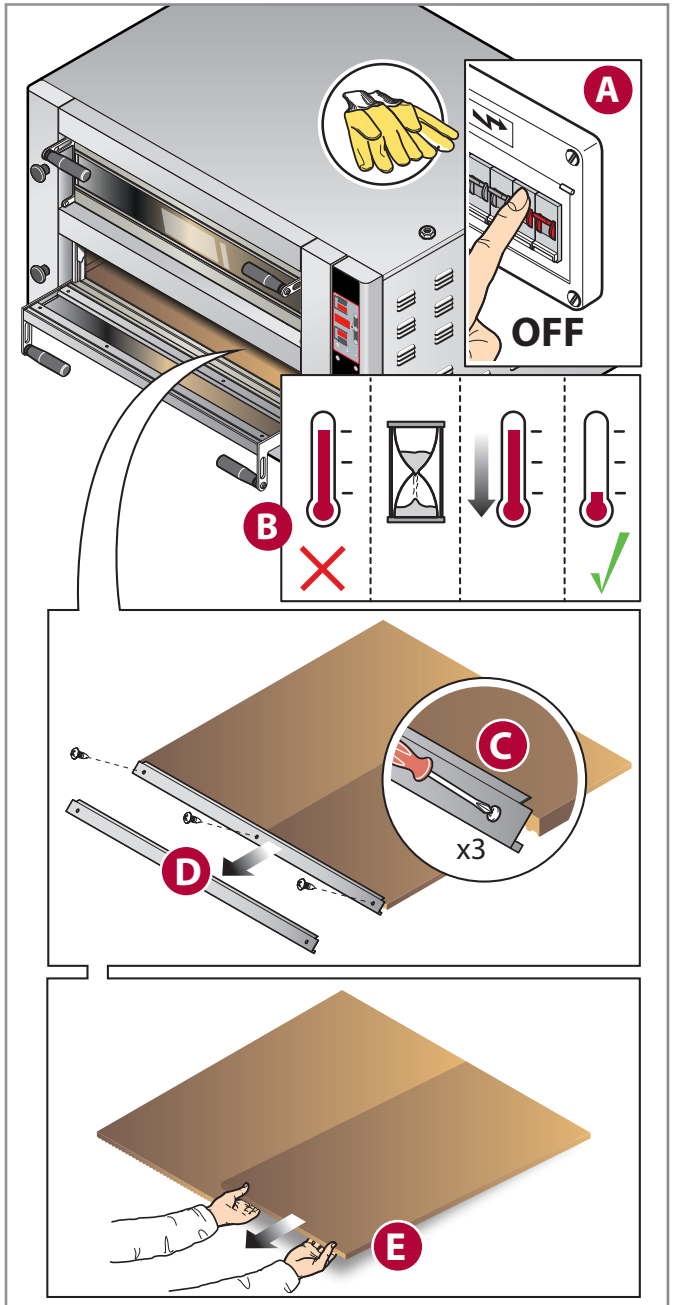

Fig.28.

CLEANING THE CHAMBER WITH THE PYROLYSIS FUNCTION

Pyrolysis is a thermochemical crystallization process of food residues that have deposited in the cooking chamber, which takes place by bringing the oven up to 400 °C - 752 °F.

Before starting the pyrolysis, remove the coarser food residues with a natural fibre brush.

CD model ovens ▶ Fig.29.

(A) Set the **temperature in the chamber to 400 °C - 752 °F**;

(B) acting on the MIN and MAX keys, set both the **top** and **bottom power** to MAX;

(C) switch the cooking chamber lights off;

(D) when the temperature is reached, switch the oven off with the ON/OFF key and let it cool down with the door closed;

(E) in a cold oven, clean the chamber from the crystallized food residues using a natural fibre brush and then vacuum with an ash extraction bin ▶. Fig.31.

D model ovens ▶ Fig.30.

(A) Set the **temperature in the chamber to 400 °C - 752 °F**;

(B) set the **top** and **bottom power** to **100%** see manual settings;

(C) switch the lights in the cooking chamber off;

(D) when the temperature is reached, switch the oven off with the ON/OFF key and let it cool down with the door closed;

(E) with a cold oven, clean the chamber from the crystallized food residues using a natural fibre brush and then vacuum with an ash extraction bin ▶ Fig.31.

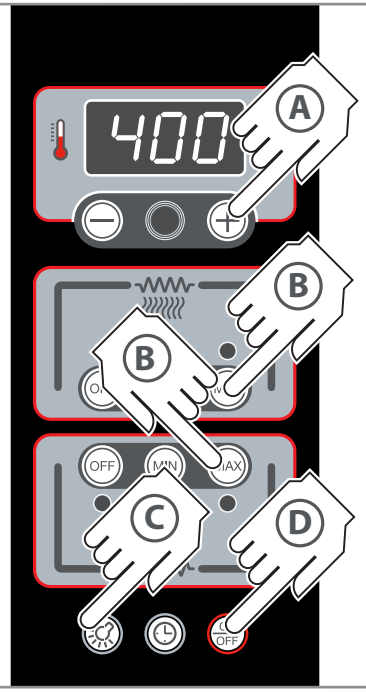

Fig.29.


Fig.31.

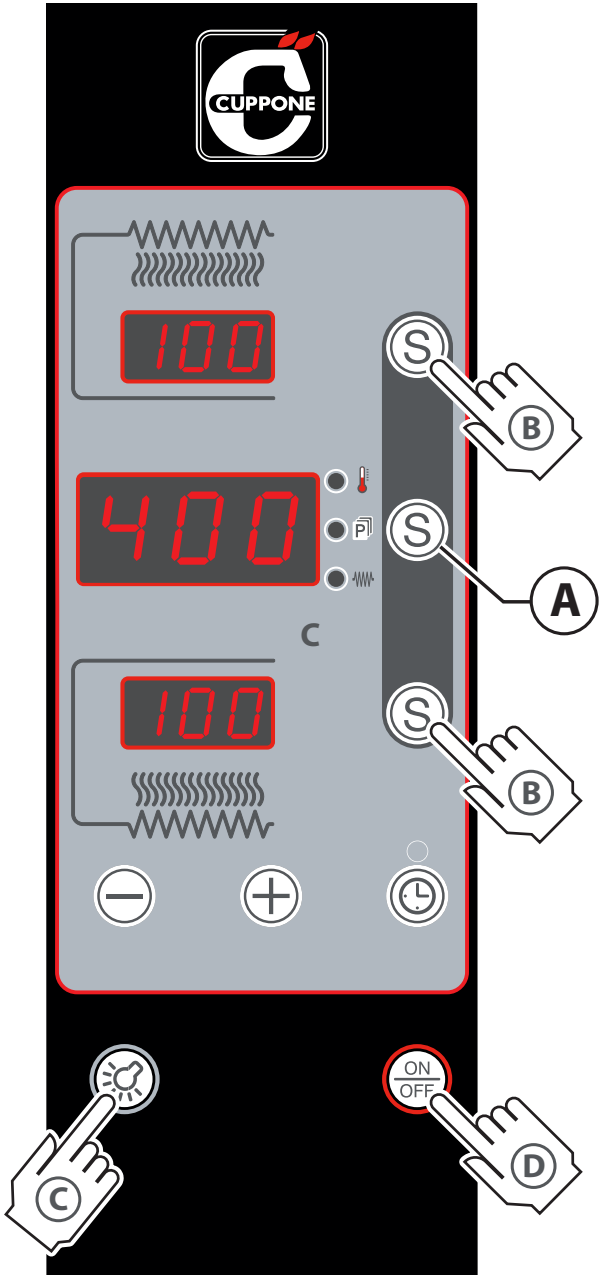

Fig.30.

Replacing components

The user must replace only the stated components: in case of a fault or for extraordinary maintenance, contact the Dealer, requesting service from an authorised technician.

As replacements, always use original spare parts to be requested from the Manufacturer: using non original parts might cause injuries to people, non optimal performance and even serious damage to the appliance itself.

Before carrying out any replacement work, it is necessary to disconnect the power supply of the appliance (by acting on the system switch).

Any replacement must be carried out with the oven completely cold and wearing adequate personal protection devices (e.g. gloves, etc.).

REPLACING THE DOOR GLASS

Fig.32.

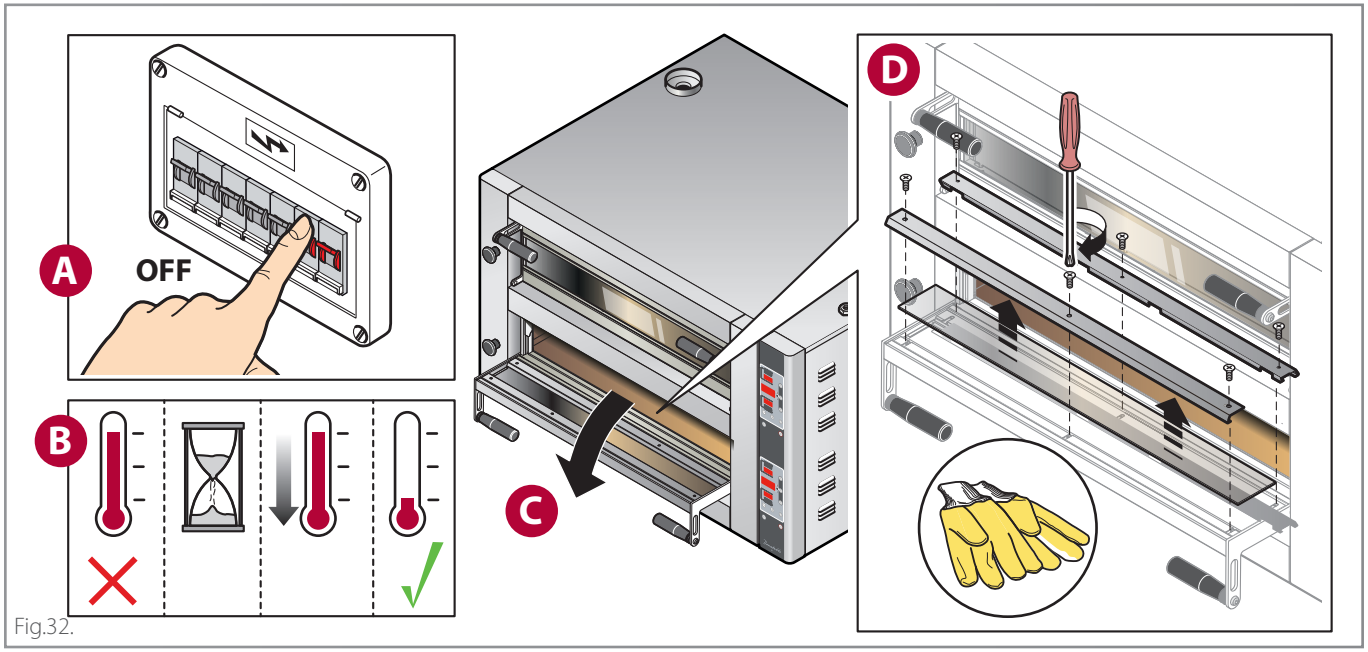

Fig.32.

REPLACING THE INTERNAL BULB AND GLASS

Fig.33.

Before replacing the bulb, **switch off the power** to the appliance (acting on the system switch); it is not enough to use the **ON/OFF** key, because bulbs can still be live.
Never press the bulb glass with your bare hands; always wear gloves.
Never switch the oven on without having refitted the bulb protective glass; replace it straight away if it breaks.

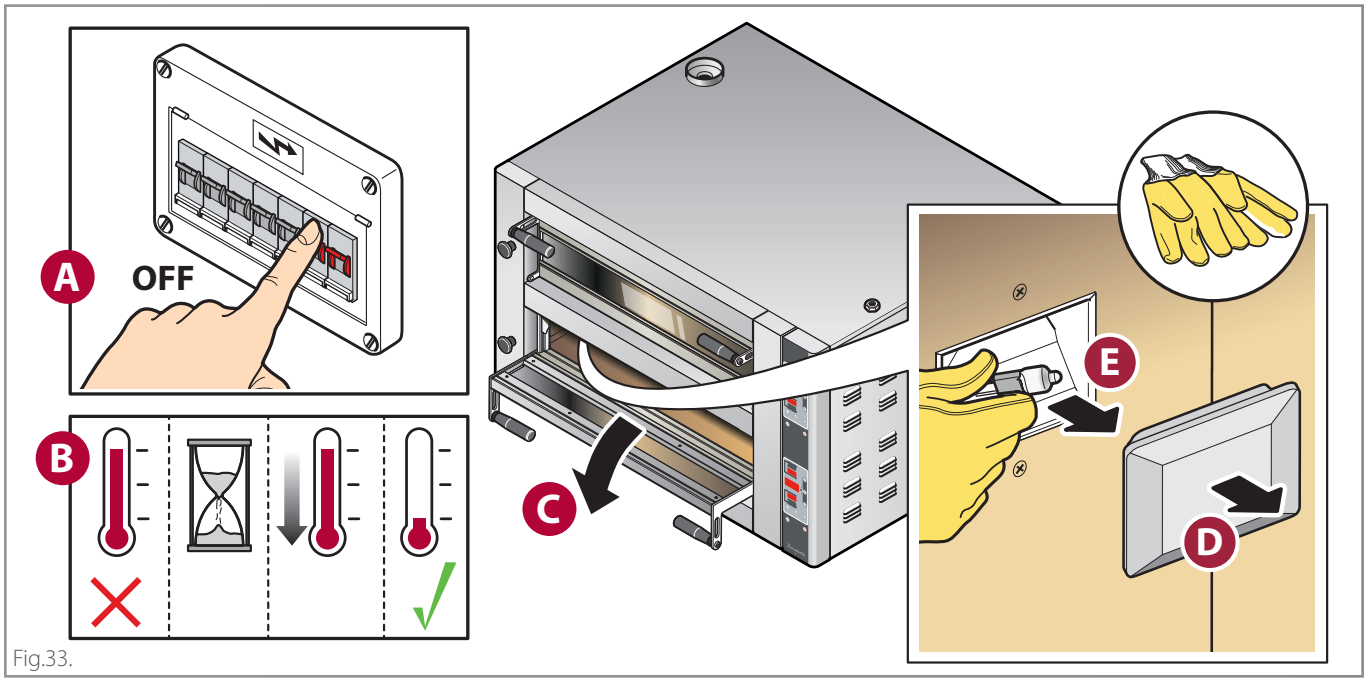

Fig.33.

REPLACING THE REFRACTORY BRICKS

Fig.34.

REPLACING THE DOOR HANDLE

Fig.35.

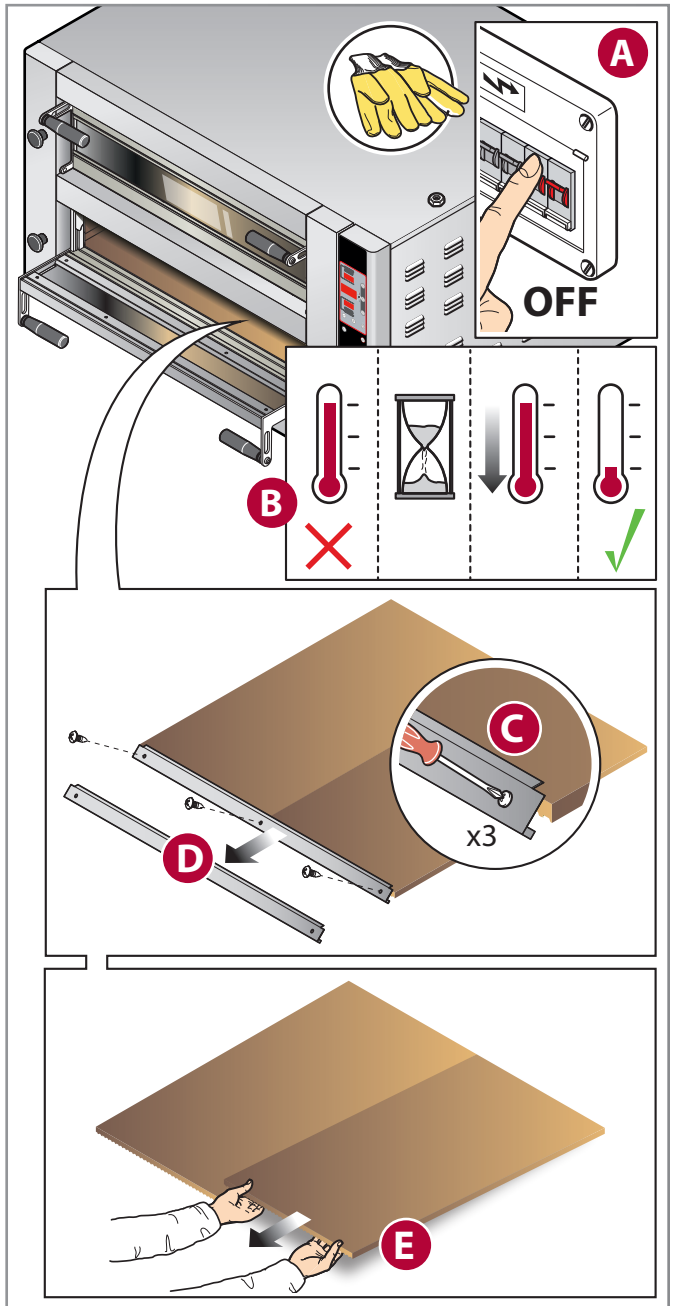

Fig.34.

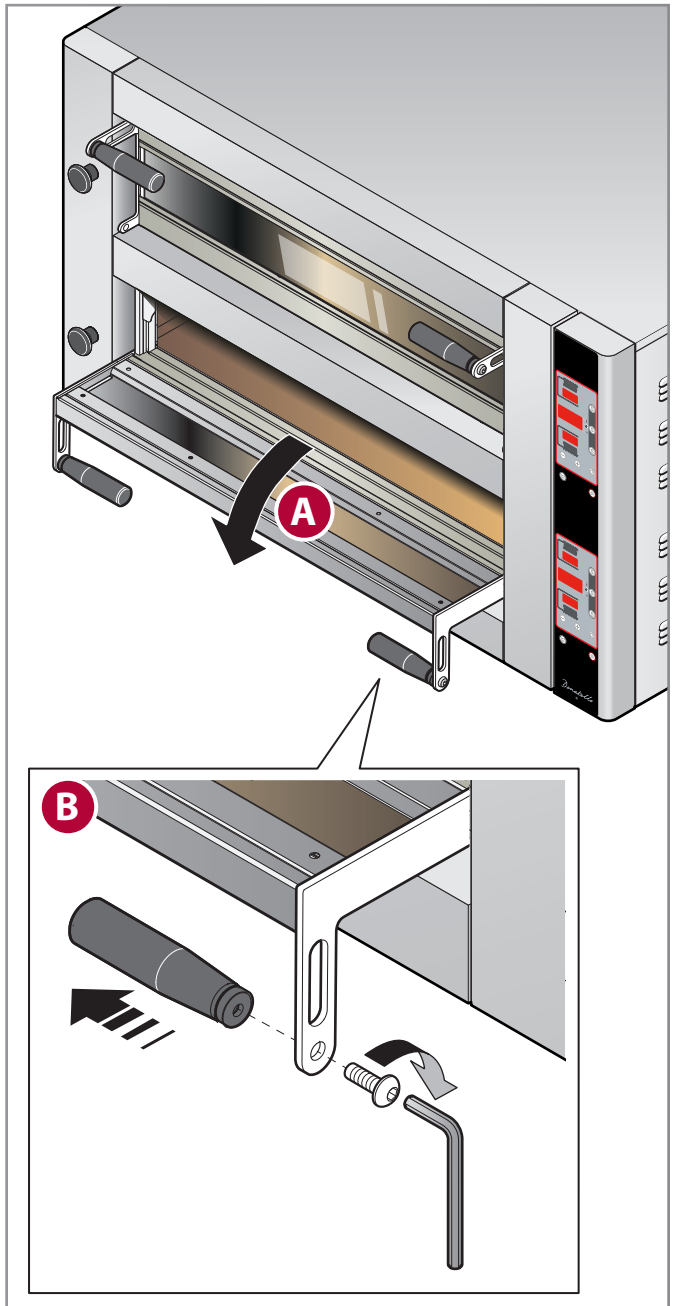

Fig.35.

Oven downtime for prolonged periods

During any downtime, switch the power off. Protect the steel outside surfaces passing over them with a soft cloth slightly damp with Vaseline oil.
Leave the door ajar to guarantee correct ventilation.
Before resuming operations:

- accurately clean the equipment and accessories;
- reconnect the equipment to the power;
- inspect the equipment before using it.

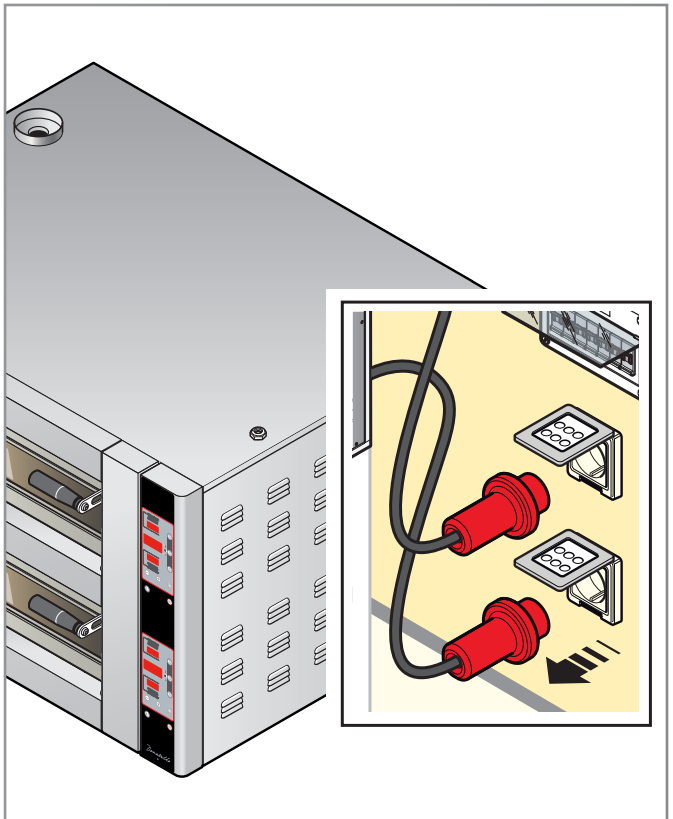

Fig.36.

Disposal at end of life

Before disposing of the equipment, cut or remove the power cord, with the appliance disconnected from the power supply, to avoid any unauthorized use and the risks associated with it.

Block the door opening (for example with adhesive tape or clips) so that no child can accidentally be trapped inside the cooking chamber while playing.

Pursuant to art. 13 of Decree-Law No. 49 of 2014 "Implementation of the WEEE Directive 2012/19/EU on waste electrical and electronic equipment", the bin crossed off with a bar specifies that the product was placed on the market after 13 August 2005 and that at the end of its useful life it must not be assimilated to other waste but must be disposed of separately. All the equipment has been made with recyclable metal materials (stainless steel, iron, aluminium, zinc plate, copper, etc.) that as a percentage make up more than 90% of the weight. Attention must be paid to the management of this product at the end of its life, reducing any negative impact on the environment and improving the efficiency of resources, applying the principles of "who pollutes pays", prevention, preparation for re-use, recycling and recovery. Please remember that illicit or incorrect product disposal is punishable by law.

Information on disposal in Italy

WEEE equipment in Italy must be delivered to:

- to Collection Centres (also named eco-islands or eco-platforms)
- the dealer where new equipment is purchased who must withdraw it free of charge ("one to one" withdrawal).

Information on disposal in European Union countries

The EU Directives on WEEE equipment has been adopted in different ways by different countries, therefore in order to dispose of this equipment correctly we suggest that you contact your local authority or your dealer in order to ask the correct method of disposal.

Disposing of ashes and food residues

The ash and food residues removed with cleaning must be disposed of according to the regulations in force in the country where the oven is used.

If in doubt, we suggest contacting the local authorities to ask for the correct method of disposal.
While waiting for disposal, the ash and food residues must be stored in fireproof metal cans, resistant to high temperatures and provided with a lid that must always remain closed.
Keep the latter away from the elements and in a place inaccessible to children and animals.
Do not approach materials that can be flammable, explosive or heat-sensitive.

Warranty conditions

- 8.1 Each product sold is to be considered compliant when delivered in the quantity, quality and type indicated in the written Confirmation, please refer to the provisions of art. 1.2.
- 8.2 The Seller guarantees:
  - (a) that the Products are free from defects in materials or workmanship, and
  - (b) that (excluding the case of known defects or which should have been known by the Buyer) the Products are of marketable quality.
- 8.3 Any hidden defects in the Products must be reported in writing by the Buyer within 8 days of discovery, under penalty of forfeiture. Packaging defects - even if they have caused defects or damage to the internal product - which had to be reported at the time of delivery, are excluded pursuant to art. 5.8.
- The defect report must contain the specific indication of the defective Products, a detailed description of the type of defect that the Product has, as well as the delivery date and that of discovery.
- The warranty is excluded if the defect derives from the Purchaser's actions such as, by way of example, incorrect installation of the Product, use of the Product in a manner that does not comply with the normal method of use, failure to comply with the instructions contained in the use and installation manual, tampering with the Product. The warranty does not cover normal wear and tear of the Product due to use.
- The Seller is responsible for defects that occur within one year from the activation of the warranty as provided for in point 8.12.
- 8.4 the Seller will have the right to examine, or have a representative examine, the Product and, if this shows the existence of the defect, the Buyer will be entitled to a repair or replacement, at the Seller's sole discretion.
- It is understood that, once the defect has been reported, the Buyer must not use the Product until it is viewed by the Seller or its representative. In the event that the Seller realizes that the Product has been used after the complaint, the Buyer loses the right to obtain a replacement or repair.
- 8.5 Replacement or repair will take place under the following terms:
  - a) The Seller may repair the defective Products by going - or sending a representative - to the place where such Products are located;
  - b) Alternatively, the Seller may repair the defective Product at its own factory, or other place chosen by the Seller,
  - c) Alternatively, the Seller may opt for the replacement of the defective Products;
- In the event that the repair / replacement is not possible, the Seller will pay the Buyer a refund to be quantified, a refund which, however, must not exceed the price paid. Compensation for damage is excluded.
- 8.6. In case of repair of the Product at a place chosen by the Seller or in case of replacement of the defective Product, the shipment of the Product will be borne by the Buyer who must send it, at its own expense and risk, to the place stated by the Seller.
- 8.7 In no case will the Seller be liable for indirect or consequential damages and/or for loss of profits that the Buyer may suffer as a result of defects in the products such as (but not limited to) cancellation of orders by customers, penalties for delayed deliveries, penalties or refunds of any kind.
- 8.8 The Seller shall indemnify the Buyer from any liability or damage arising from defective Products, unless such liability derives from the Buyer's negligent acts or omissions or from the latter's non-fulfilment of its obligations.
- 8.9 The Seller is not liable for damage to persons and/or property that may derive from the improper use of the Products and/or from any use, processing or transformation of the Products that do not comply with their intended use and/or the instructions provided by the Seller. Save the hypothesis of gross negligence or wilful misconduct by the Seller.
- The Seller will also not be liable in the event of damage to property or injury to people or in the case of malfunction or damage or deterioration of the Product deriving from the fact that the Product has been connected to a non-compliant electrical system.
- 8.10 The Buyer will not be able to raise any claim for injury to people or damage to property other than those which are the subject of the contract, or for loss of profit, unless it results from the circumstances of the case that the Seller has committed "gross negligence".
- 8.11 "Gross negligence" does not include any and all lack of adequate care and expertise, but means an act or omission by the Seller which implies either a failure to take into consideration those serious consequences that a conscientious supplier would normally have foreseen as probably occurring, or a deliberate neglect of any consequence deriving from such act or omission.
- 8.12 The effect of the warranty referred to in this article is subject to its activation to be carried out through the website www.cuppone.com within 48 hours after the time the Product is installed.

Spare parts

- 9.1 For 10 years from delivery of the Product, the Seller undertakes, at the request of the Buyer, to assist him in identifying spare parts for product maintenance. In any case, the Seller is in no way responsible for the failure to identify such sources.

Applicable law and multi-step clause

- 11.1 Italian law, as the Seller's law, will govern sales made on the basis of these General Conditions.
- 11.2 The Parties exclude the application of the Vienna Convention.
- 11.3 The parties will submit any disputes arising from sales made on the basis of these General Conditions to the conciliation attempt provided for by the Conciliation Service of the Milan Arbitration Chamber. In the event that the attempt fails, any disputes, even of a non-contractual nature, deriving from sales made on the basis of these General Conditions, will be resolved by arbitration according to the Rules of the Milan Arbitration Chamber, by a single arbitrator/three arbitrators, appointed in compliance with this Regulation. The Arbitration Tribunal will judge according to Italian law. The seat of the arbitration will be in Milan (Italy). The language of the arbitration will be Italian.

What to do in case of any malfunction

- Try and check the table on this page. If none of the proposed solutions solves the problem, continue reading the following procedure.
- Check if any error messages are displayed.

  Message .....
- Note the oven data (rating plate) and the date and number of the appliance purchase invoice.

  Serial number.....

  Model.....

  Invoice date.....

  Invoice number .....
- Read the chapter on warranty carefully.

WARRANTY - *page* **25**.

- Contact the Dealer with the details of the oven. While waiting for Technical service, disconnect the appliance from the mains.

CUPPONE since 1963
CUPPONE S.R.L.
Via Sile, 36
31057 Silea (TV) - ITALY
T +39 0422 361143
F +39 0422 360993
info@cuppone.com - www.cuppone.com

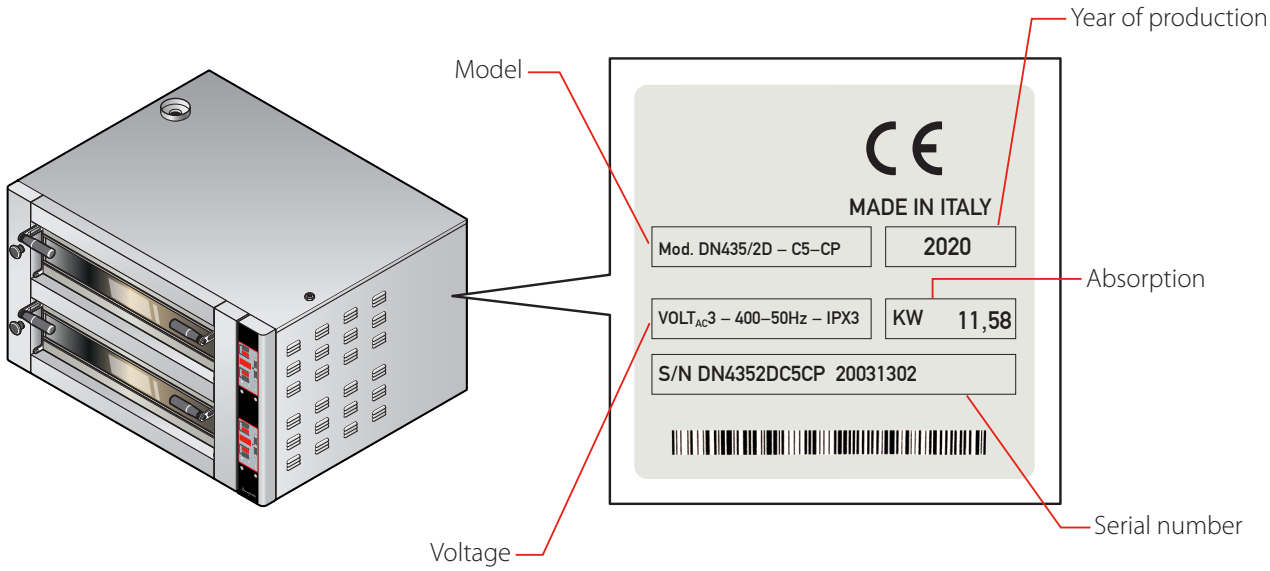

Fig.37.

Problem	Solution
The oven does not turn on	• Make sure the oven is correctly connected to the mains (plug correctly inserted into the socket) and that the mains are working. • Make sure the main switch is ON.
The oven turns on but cooking does not start	• Make sure you set the cooking parameters correctly.
The oven does not cook evenly	• Make sure you set the cooking parameters correctly. • In case of incomplete baking cycles, change the positions of the pizzas.
The first pizzas are burnt	• In preheating, the percentage (mod. D) / setting (mod. CD) of the BOTTOM has been set too high: the refractory surfaces (without pizzas) have become too hot and burnt the first pizzas.
Products not very brown on the surface	• In the front left there is a valve that opens and closes the steam bleed valve: for example, if it is not opened, too much humidity could be generated in the chamber which prevents the infrared rays of the top heating elements from browning the surface of the products.
Excessive humidity is coming out of the oven door	• Cooked products normally release humidity: if the steam bleed valve is not opened correctly, the steam gets out from the door.

CUPPONE since 1963

CUPPONE S.R.L.
Via Sile, 36
31057 Silea (TV) - ITALY
T +39 0422 361143
F +39 0422 360993
info@cuppone.com - www.cuppone.com